DK

www.peelpumps.co.uk
+44 (0)1706 558352

Applications
Drainage for waste water.
Suitable for dirty water with solid particles of max. diameter of 35 mm. (Three-phase version 25 mm)

Motor and features
Insulation class B
Protection degree IP68
Power supply in single-phase 230V-50Hz or three-phase 230/400V-50Hz
Electrical cable 10 mt

Application limits
Max. water temperature 40°C
Immersion depth from 0,5m-5m
Liquid condition: dirty water with maximum solid of 50mm.
pH level from 4-10
Max. head: 14 mt

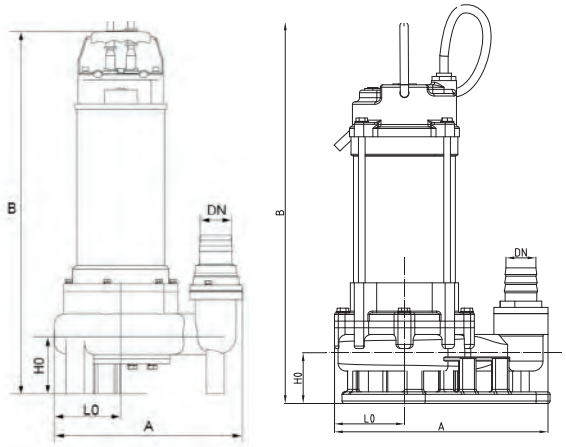

Component	Material
Motor	Brass
Pump body	Cast Iron
Motor shaft	(Dark 400/500 AISI 304)
Bottom support	Cast Iron
Mechanical seal	Graphite & Cermic
Seal lubrificant oil	Oil for food machinery and pharmaceutic use
VORTEX impeller	Cast Iron

PERFORMANCES

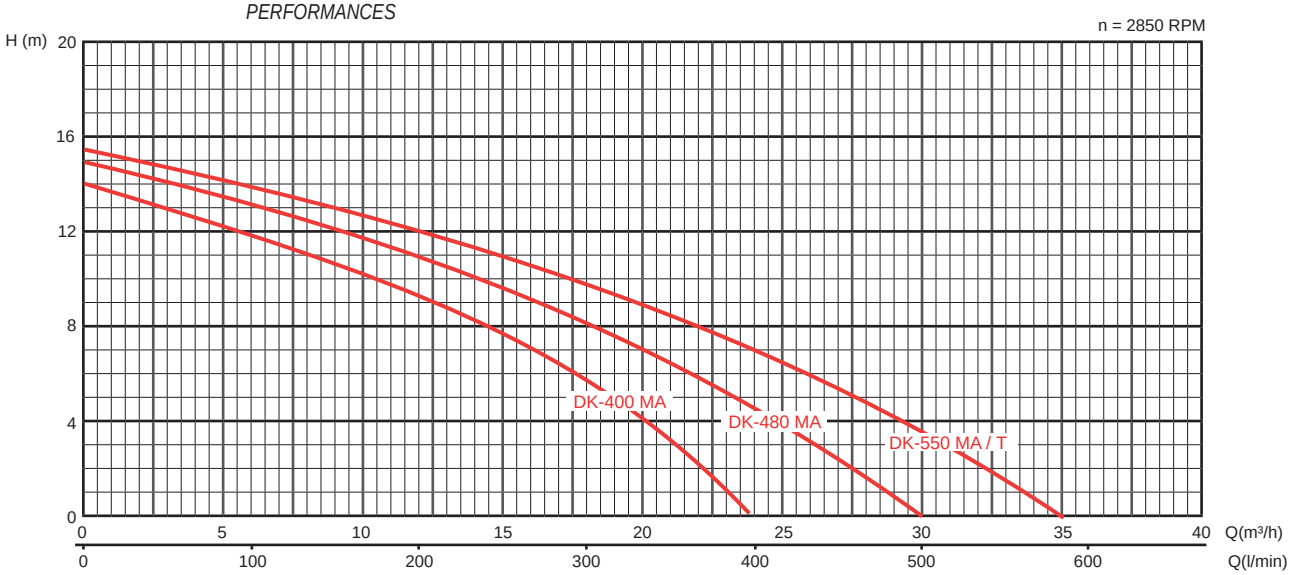

Model		Nominal power		AMPERE		Capacity							
						l/min	0	50	100	150	250	350	450
						m³/h	0	3	6	9	15	21	27
		Hp	kW P2	Single-phase 230V	Three-phase 400V	Total head in meters w.c.							
DK-400 MA		1	0,75	5,2	/	H (m)	14	13	12	10,5	7,5	3	
DK-480 MA		1,5	1,1	7,3	/		15	14,5	13	12	9,5	6,5	2,5
DK-550 MA		2	1,5	9,5	/		15,5	14,5	14	13	11	8,5	5,5
DK-550 T		2	1,5	/	3,6		15,5	14,5	14	13	11	8,5	5,5